MATH 215 - Problem Set 08
Jointly Distributed Random Variables

Özyeğin University
Lect. İsmail Başoğlu, Ph.D.

1. Let X and Y be two continuous random variables following the joint probability density function:

$$f_{XY}(x,y) = \begin{cases} cxy & 0 < x < 3,\ 1 < y < 5 \\ 0 & \text{otherwise} \end{cases}$$

   (a) Determine c so that f_{XY} is a density function.
   (b) Find $P(1 \leq X \leq 2,\ 3 \leq Y \leq 4)$.
   (c) Compute $E[X]$ and $E[Y]$.
   (d) Compute $P(X \geq Y)$.
   (e) Are X and Y independent?

2. Let X and Y denote respectively the lifetime (in years) of an engine and the suspension system of an automobile. The joint density function of X and Y is given by:

$$f_{XY}(x,y) = \begin{cases} 2e^{-x}e^{-2y} & 0 < x < \infty,\ 0 < y < \infty \\ 0 & \text{otherwise} \end{cases}$$

   (a) Find the marginal PDF of X.
   (b) Find the marginal PDF of Y.
   (c) Find the probability that this automobile will not have any problems due to engine or the suspension system, namely $P(X > 1, Y > 1)$.
   (d) Find the probability that this automobile will have an engine problem in four years, namely $P(X < 4)$.
   (e) Compute the probability that engine fails before the suspension system fails, namely $P(X < Y)$.
   (f) Are X and Y independent?

3. Consider the following joint PDF of X and Y:

$$f_{XY}(x,y) = cx^2y, \quad 0 < x < 1, \quad 0 < y < 1$$

   (a) What is c? (Ans: 6)
   (b) Are X and Y independent? (Ans: Yes, they are independent.)

4. Suppose that 2 batteries are randomly chosen from a group of 3 new, 4 used but still working, and 5 defective batteries. If we let X and Y denote, respectively, the number of new and used but still working batteries that are chosen.

   (a) Find the joint PMF of X and Y.
   (b) Find the marginal PMFs of X and Y.
   (c) Compute the expected values of X and Y.
   (d) Are X and Y independent? (Ans: No, they are not independent!)

5. Suppose X and Y are random variables with following PMFs.

$$p_X(x) = \begin{cases} 0.3 & x = 1 \\ 0.5 & x = 2 \\ 0.2 & x = 3 \\ 0 & \text{otherwise} \end{cases}, \quad p_Y(y) = \begin{cases} 0.2 & y = -1 \\ 0.7 & y = 0 \\ 0.1 & y = 1 \\ 0 & \text{otherwise} \end{cases}$$

and let the joint probability mass function $p_{XY}(x, y)$ of X and Y be given as in the following tabulated format.

$p_{XY}(x, y)$	y		
x	-1	0	1
1	0.06	0.21	0.03
2	0.10	0.35	0.05
3	0.04	0.14	0.02

(a) Are X and Y independent?

(b) Compute $P(X > Y)$. (Ans: 0.97)

(c) Compute $P(X \leq Y + 2)$. (Ans: 0.72)

6. Suppose that $p_{XY}(x, y)$, the joint probability mass function of X and Y, is given by:

$$p_{XY}(x, y) = \begin{cases} 0.4, & x = 0, y = 0 \\ 0.2, & x = 0, y = 1 \\ 0.1, & x = 1, y = 0 \\ 0.3, & x = 1, y = 1 \\ 0, & \text{elsewhere} \end{cases}$$

Are X and Y independent?

7. Suppose that 15 percent of the families in a certain community have no children, 20 percent have 1 child, 35 percent have 2 children, and 30 percent have 3. Suppose further that in each family each child is equally likely (independently) to be a boy or a girl. Suppose a family is randomly chosen at random from this community, let B be the number of boys and G be the number of girls of this family:

(a) What is the joint probability mass function of B and G (namely $p_{BG}(b, g)$)?

(b) What is the marginal PMF of B (namely $p_B(b)$)?

(c) What is the marginal PMF of G (namely $p_G(g)$)?

(d) Calculate the expected number of boys in this randomly selected family (namely $E[B]$)?

(e) Calculate the expected number of girls in this randomly selected family (namely $E[G]$)?

(f) Are B and G independent?

8. A privately owned company distributes boxes of chocolates with a mixture of creams, toffees, and cordials. Suppose that the weight of each box is 1 kilogram, but the individual weights of creams, toffees, and cordials vary from box to box. For a randomly selected box, let X and Y represent the weights of creams and toffees, respectively, and suppose that the joint density function of these variables is:

$$f_{XY}(x,y) = \begin{cases} 24xy, & 0 \le x \le 1,\ 0 \le y \le 1,\ x+y \le 1, \\ 0, & o/w \end{cases}$$

   (a) Find the probability that in a given box the cordials account for more than half of the weight.
   (b) Find the marginal PDF for Y, the weight of the toffees.
   (c) Are X and Y independent? Explain your answer.

9. Consider the two random variables X and Y and their joint density:

$$f(x,y) = \begin{cases} ax & x \in [0,1],\ y \in [1-x, 1+x] \\ 0 & \text{elsewhere} \end{cases}$$

   (a) Find a.
   (b) Find the marginal density of Y.
   (c) $E\left[X^{-1}\right]$.
   (d) Are X and Y independent? Justify your answer.

10. Consider the two random variables X and Y an their joint density:

$$f_{XY}(x,y) = \begin{cases} 2\lambda^2 e^{-\lambda(x+y)} & 0 \le x < \infty,\ 0 \le y \le x \\ 0 & \text{elsewhere} \end{cases}$$

    Find the marginal distribution of X.

11. Two random variables X and Y have, for $X = x$ and $Y = y$, the joint probability density function;

$$f_{XY}(x,y) = \frac{1}{2\left(x^2 y\right)}, \quad 1 \le x \le \infty,\ \frac{1}{x} \le y \le x$$

    Derive the marginal distributions of X and Y.

12. Over the unit circle, we randomly choose three points, each of which are independently and uniformly distributed over the circle.

   (a) Using these three points as corners, we draw a triangle. What is the probability that the center of the circle is inside this triangle?
   (b) What are the respective probabilities for this triangle to be an obtuse, right and acute triangle?
   (c) Draw lines which are tangent to the circle at these random points. What is the probability that these lines form a triangle?

13. A gun turret is a weapon mount that lets the weapon be aimed and fired in many directions. We have two parallel lines, l_x and l_y. We randomly position a gun turret over l_x line and a target over l_y line independently and with respect to following density functions.

$$f_X(x) = \begin{cases} 0.5 & x \in [-1, 1] \\ 0 & o/w \end{cases}, \qquad f_Y(y) = \begin{cases} |y|/4 & y \in [-2, 2] \\ 0 & o/w \end{cases}$$

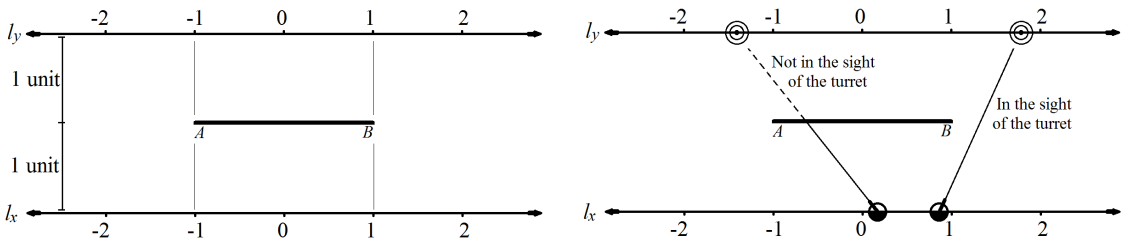

There is a parallel obstacle in the middle of these two lines that is shown with the line segment $[AB]$. The gun can not shoot through this obstacle. We are interested in the probability of the target being in the sight of the gun turret.

(a) Over an xy-plane, draw the domain where the joint density $f_{XY}(x, y)$ takes positive values. Indicate the regions where the desired event occurs.

(b) Find the probability of the target being in the sight of the gun turret.

14. Consider the following joint probability mass function of X and Y, where a and b are two unknown real values:

$$p_{XY}(x, y) = \begin{cases} 0.3, & x = 0, y = 0 \\ 0.3, & x = 0, y = 1 \\ a, & x = 1, y = 0 \\ b, & x = 1, y = 1 \\ 0, & \text{elsewhere} \end{cases}$$

It is told that X and Y are independent. Then, what is $Var[X] - Var[Y]$?

15. X and Y are jointly continuous random variables with joint probability density function:

$$f_{XY}(x, y) = \begin{cases} 1 - x + y & 0 \le x \le 1, \quad 0 \le y \le 1 \\ 0 & \text{elsewhere} \end{cases}$$

(a) Determine $E[Y]$.

(b) Compute the probability $P\{X > 0.5 \cup Y > 0.5\}$.

16. Let X and Y respectively denote the time that James and Dwight finishes a one-hour maths exam. The joint probability density function for X and Y is $f_{XY}(x, y) = 1$, for $0 \le x \le 1$ and $0 \le y \le 1$, and zero elsewhere. What is the probability that the time that Dwight spends in the exam is at least 48 minutes but at most 25% more than the time spent by James?

17. Consider the joint density function of random variables X and Y:

$$f_{XY}(x,y) = \begin{cases} 6(1-x-y) & x \in [0,1], \quad y \in [0,1], \quad x+y \leq 1 \\ 0 & o/w \end{cases}$$

(a) Over an xy-plane, draw the domain where the joint density $f(x,y)$ takes positive values. Also, illustrate the density function in three dimensions and indicate x, y and $f(x,y)$ axes.

(b) Compute the probability $P(X \leq 3Y)$.

18. Let X and Y be discrete random variables with joint probability mass function:

$$p_{XY}(x,y) = \begin{cases} \frac{2^{x-y+1}}{9}, & \text{for } x = 1,2 \text{ and } y = 1,2 \\ 0, & \text{elsewhere} \end{cases}$$

Calculate $E\left[\frac{X}{Y}\right]$.

Solution

1. (a) The total volume under the joint PDF should be equal to 1.

$$\int_1^5 \int_0^3 cxydxdy = \int_1^5 \left[\frac{cyx^2}{2}\right]_{x=0}^{x=3} dy = \int_1^5 \frac{9cy}{2} dy = \left[\frac{9cy^2}{4}\right]_{y=1}^{y=5} = \frac{225c - 9c}{4} = 54c = 1$$

Thus, c should be $\frac{1}{54}$ so f_{XY} conforms the properties of a bivariate PDF.

(b)

$$P\left(1 \leq X \leq 2,\ 3 \leq Y \leq 4\right) = \int_3^4 \int_1^2 \frac{xy}{54} dxdy = \int_3^4 \left[\frac{yx^2}{108}\right]_{x=1}^{x=2} dy = \int_3^4 \frac{y}{36} dy = \left[\frac{y^2}{72}\right]_{y=3}^{y=4} = \frac{7}{72}$$

(c) We could have directly calculated these expectations by:

$$E\left[X\right] = \int_1^5 \int_0^3 x f_{XY}\left(x, y\right) dxdy = \int_1^5 \int_0^3 \frac{x^2 y}{54} dxdy, \qquad E\left[Y\right] = \int_1^5 \int_0^3 y f_{XY}\left(x, y\right) dxdy = \int_1^5 \int_0^3 \frac{xy^2}{54} dxdy$$

however, under these double integrals, there lies the solution for marginal PDFs of X and Y. So, we will solve the above integrals step by step to identify the PDFs as well.

Let us calculate the marginal PDF of X and, then, $E\left[X\right]$ first.

$$f_X\left(x\right) = \int_1^5 \frac{xy}{54} dy = \left[\frac{xy^2}{108}\right]_{y=1}^{y=5} = \frac{2x}{9}, \quad 0 < x < 3$$

$$E\left[X\right] = \int_0^3 \frac{2x^2}{9} dx = \left[\frac{2x^3}{27}\right]_0^3 = 2$$

Now we calculate the marginal PDF of Y and, then, $E\left[Y\right]$.

$$f_Y\left(y\right) = \int_0^3 \frac{xy}{54} dx = \left[\frac{x^2 y}{108}\right]_{x=0}^{x=3} = \frac{y}{12}, \quad 1 < y < 5$$

$$E\left[Y\right] = \int_1^5 \frac{y^2}{12} dy = \left[\frac{y^3}{36}\right]_1^5 = \frac{31}{9}$$

(d) The joint distribution is taking non-negative values in the rectangular domain gray-colored. We are interested in the probability of the extra-shaded domain, so we need to calculate the volume under the joint PDF in this region.

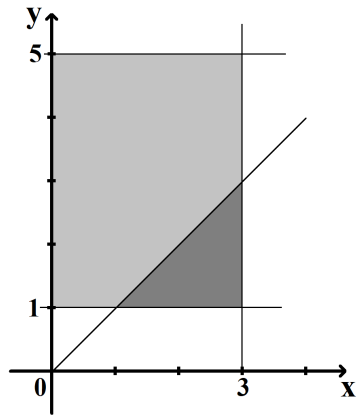

$$P(X \geq Y) = \int_1^3 \int_1^x \frac{xy}{54} dydx = \int_1^3 \left[\frac{xy^2}{108}\right]_{y=1}^{y=x} dx = \int_1^3 x^3 - x108dx = \left[\frac{x^4 - 2x^2}{432}\right]_{x=1}^{x=3} = \frac{4}{27}$$

The same probability could have been calculated by solving the following integral.

$$P(X \geq Y) = \int_1^3 \int_y^3 \frac{xy}{54} dxdy$$

(e) X and Y are independent since:

$$f_X(x) f_Y(y) = \frac{2x}{9}\frac{y}{12} = \frac{xy}{54} = f_{XY}(x, y)$$

2. (a)

$$f_X(x) = \int_0^\infty 2e^{-x}e^{-2y} dy = \left[-e^{-x}e^{-2y}\right]_{y=0}^{\infty} = e^{-x}, \qquad 0 \leq x < \infty$$

(b)

$$f_Y(y) = \int_0^\infty 2e^{-x}e^{-2y} dx = \left[-2e^{-x}e^{-2y}\right]_{x=0}^{\infty} = 2e^{-2y}, \qquad 0 \leq y < \infty$$

(c)

$$\begin{aligned} P(X > 1, Y > 1) &= \int_1^\infty \int_1^\infty 2e^{-x}e^{-2y} dxdy \\ &= \int_1^\infty \left[-2e^{-x}e^{-2y}\right]_{x=1}^{\infty} dy \\ &= \int_1^\infty 2e^{-1}e^{-2y} dy \\ &= \left[-e^{-1}e^{-2y}\right]_{y=1}^{\infty} \\ &= e^{-3} \approx 0.0498 \end{aligned}$$

(d) We can directly use the marginal PDF of X. Please notice that the marginal distribution of X is standard exponential ($\lambda = 1$). Therefore we can us the marginal CDF.

$$P(X < 4) = F_X(4) = 1 - e^{-4} \approx 0.9817$$

(e)

$$P(X<Y)=\int_0^\infty\int_x^\infty 2e^{-x}e^{-2y}dydx=\int_0^\infty\left[-e^{-x}e^{-2y}\right]_{y=x}^{\infty}dx=\int_0^\infty e^{-3x}dx=\left[-\frac{1}{3}e^{-3x}\right]_0^\infty=\frac{1}{3}$$

(f) X and Y are independent since:

$$f_X(x)f_Y(y)=\left(e^{-x}\right)\left(2e^{-2y}\right)=2e^{-x}e^{-2y}=f_{XY}(x,y)$$

3. (a) The total volume under the joint PDF in the unit square should be equal to 1.

$$\int_0^1\int_0^1 cx^2ydxdy=\int_0^1\left[\frac{cx^3y}{3}\right]_{x=0}^{x=1}dy=\int_0^1\frac{cy}{3}dy=\left[\frac{cy^2}{6}\right]_{y=0}^{y=1}=\frac{c}{6}=1$$

Hence, $c=6$.

(b) Let us compute the marginal PDFs.

$$f_X(x)=\int_0^1 6x^2ydy=\left[3x^2y^2\right]_{y=0}^{y=1}=3x^2,\quad 0\le x\le 1$$

$$f_Y(y)=\int_0^1 6x^2ydx=\left[2x^3y\right]_{x=0}^{y=1}=2y,\quad 0\le y\le 1$$

Since $f_X(x)f_Y(y)=f_{XY}(x,y)$, X and Y independent.

4. Both X and Y can take values between 0 and 2.

(a)

$$P(X=0,Y=0)=\frac{\binom{3}{0}\binom{4}{0}\binom{5}{2}}{\binom{12}{2}}=\frac{10}{66},\qquad P(X=0,Y=1)=\frac{\binom{3}{0}\binom{4}{1}\binom{5}{1}}{\binom{12}{2}}=\frac{20}{66}$$

$$P(X=0,Y=2)=\frac{\binom{3}{0}\binom{4}{2}\binom{5}{0}}{\binom{12}{2}}=\frac{6}{66},\qquad P(X=1,Y=0)=\frac{\binom{3}{1}\binom{4}{0}\binom{5}{1}}{\binom{12}{2}}=\frac{15}{66}$$

$$P(X=1,Y=1)=\frac{\binom{3}{1}\binom{4}{1}\binom{5}{0}}{\binom{12}{2}}=\frac{12}{66},\qquad P(X=2,Y=0)=\frac{\binom{3}{2}\binom{4}{0}\binom{5}{0}}{\binom{12}{2}}=\frac{3}{66}$$

$$P(X=2,Y=1)=P(X=1,Y=2)=P(X=2,Y=2)=0$$

Let us tabulate the PMF.

$x\backslash y$	0	1	2
0	$\frac{10}{66}$	$\frac{20}{66}$	$\frac{6}{66}$
1	$\frac{15}{66}$	$\frac{12}{66}$	0
2	$\frac{3}{66}$	0	0

(b)

$$p_X(x) = \begin{cases} 36/66, & x = 0 \\ 27/66, & x = 1 \\ 3/66, & x = 2 \\ & \text{elsewhere} \end{cases} \qquad p_Y(y) = \begin{cases} 28/66, & y = 0 \\ 32/66, & y = 1 \\ 6/66, & y = 2 \\ & \text{elsewhere} \end{cases}$$

(c) One can give straightforward answers such as:

- $E[X]$ should be proportional to $3/12$ in 2, therefore, $1/2$.
- $E[Y]$ should be proportional to $4/12$ in 2, therefore, $2/3$.

or we can use the marginal PMFs.

$$E[X] = 0 \times \frac{36}{66} + 1 \times \frac{27}{66} + 2 \times \frac{3}{66} = \frac{1}{2}$$

$$E[Y] = 0 \times \frac{28}{66} + 1 \times \frac{32}{66} + 2 \times \frac{44}{66} = \frac{2}{3}$$

(d) No, they are not independent. Because:

$$p_X(0)\, p_Y(0) = \frac{36}{66}\frac{28}{121} \neq \frac{10}{66} p_{XY}(0,0)$$

5. (a) Yes they are independent. Because for all $x \in \{1,2,3\}$ and $y \in \{-1,0,1\}$, we can show that $p_X(x)\, p_Y(y) = p_{XY}(x,y)$.

$$\begin{array}{ll} p_{XY}(1,-1) = 0.06, & p_X(1)\, p_Y(-1) = 0.3 \times 0.2 = 0.06 \\ p_{XY}(2,-1) = 0.10, & p_X(2)\, p_Y(-1) = 0.5 \times 0.2 = 0.10 \\ p_{XY}(3,-1) = 0.04, & p_X(3)\, p_Y(-1) = 0.2 \times 0.2 = 0.04 \\ p_{XY}(1,0) = 0.21, & p_X(1)\, p_Y(0) = 0.3 \times 0.7 = 0.21 \\ p_{XY}(2,0) = 0.35, & p_X(2)\, p_Y(0) = 0.5 \times 0.7 = 0.35 \\ p_{XY}(3,0) = 0.14, & p_X(3)\, p_Y(0) = 0.2 \times 0.7 = 0.14 \\ p_{XY}(1,1) = 0.03, & p_X(1)\, p_Y(1) = 0.3 \times 0.1 = 0.03 \\ p_{XY}(2,1) = 0.05, & p_X(2)\, p_Y(1) = 0.5 \times 0.1 = 0.05 \\ p_{XY}(3,1) = 0.02, & p_X(3)\, p_Y(1) = 0.2 \times 0.1 = 0.02 \end{array}$$

However, one could have seen this result by discovering the proportionality between the rows (or the columns) of the tabulated PMF.

(b)

$$P(X > Y) = \sum_{y=-1}^{1} \sum_{x>y} p_{XY}(x,y) = 1 - P(X = 1, Y = 1) = 0.97$$

(c)

$$P(X \leq Y + 2) = \sum_{y=-1}^{1} \sum_{x>y} p_{XY}(x,y) \sum_{y=-1}^{1} \sum_{x<y+2} p_{XY}(x,y) = 1 - p_{XY}(2,-1) - p_{XY}(3,-1) - p_{XY}(3,0) = 0.72$$

6. Let us identify:

$$p_X(0) = P(X = 0) = P(X = 0, Y = 0) + P(X = 0, Y = 1) = 0.4 + 0.2 = 0.6$$

$$p_Y(0) = P(Y = 0) = P(X = 0, Y = 0) + P(X = 1, Y ==) = 0.4 + 0.1 = 0.5$$

Since:

$$p_X(0)\, p_Y(0) = 0.3 \neq 0.4 p_{XY}(0,0)$$

we can say that they are independent.

7. (a)

$p_{BG}(b,g)$	g			
b	0	1	2	3
0	0.15	0.10	0.0875	0.0375
1	0.10	0.175	0.1125	0
2	0.0875	0.1125	0	0
3	0.0375	0	0	0

(b)

b	0	1	2	3
$p_B(b)$	0.375	0.3875	0.2	0.0375

(c) Obviously the same as $p_B(b)$. They should have identical distributions.

(d) $E[B] = 0 \times 0.375 + 1 \times 0.3875 + 2 \times 0.2 + 3 \times 0.0375 = 0.9$

(e) Again, since they have identical distributions, $E[G] = E[B] = 0.9$

(f) They are not independent. Though this can easily be shown by a simple calculation, we can explain it qualitatively as well. Though G can take integer values from 0 to 3 unconditionally, if the number of boys $B = 3$, G can not take any positive value.

8. The joint distribution is taking non-negative values in the triangular domain colored with gray.

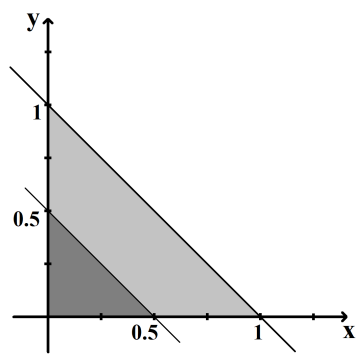

(a) The question asks $P(X+Y<0.5)$. We are interested in the probability of the extra-shaded domain, so we need to calculate the volume under the joint PDF in this region.

$$\begin{aligned} P(X+Y<0.5) &= \int_0^{0.5}\int_0^{0.5-y} 24xy\,dx\,dy \\ &= \int_0^{0.5} \left[12x^2y\right]_{x=0}^{x=0.5-y} dy \\ &= \int_0^{0.5} 3y - 12y^2 + 12y^3 dy \\ &= \left[\tfrac{3}{2}y^2 - 4y^3 + 3y^4\right]_0^{0.5} = \tfrac{1}{16} \end{aligned}$$

(b)

$$f_Y(y) = \int_0^{1-y} 24xydx = \left[12x^2y\right]_{x=0}^{x=1-y} = 12y(1-y)^2, \qquad 0 \le y \le 1$$

Please note that, the marginal PDF of X would be the same.

$$f_X(x) = \int_0^{1-x} 24xydy = \left[12xy^2\right]_0^{1-x} = 12x(1-x)^2, \quad 0 \le x \le 1$$

(c) They are not independent. Since:

$$f_X(x) f_Y(Y) = \left[12x(1-x)^2\right]\left[12y(1-y)^2\right] \neq 24xy = f_{XY}(x,y)$$

We can also say that, unconditionally, Y can get any value between 0 and 1. But when X is observed, Y can not be greater than $1-X$. This a short reason to why they are not independent.

9. The joint distribution is taking non-negative values in the triangular domain colored with gray.

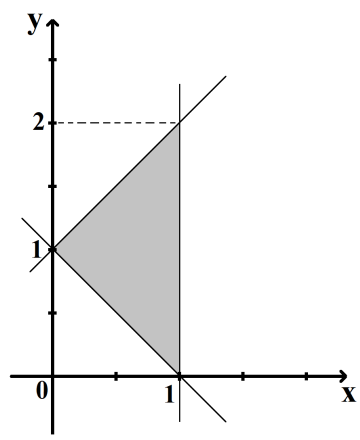

(a) In the above domain, the volume under the joint PDF should be equal to 1.

$$\int_0^1 \int_{1-x}^{1+x} axdydx = \int_0^1 [axy]_{y=1-x}^{y=1+x} dx = \int_0^1 2ax^2 dx = \left[\frac{2a}{3}x^3\right]_{x=0}^{x=1} = \frac{2a}{3} = 1$$

Hence $a = \frac{3}{2}$.

(b) Now, that is a little tricky. We know that, when we intend to compute $f_Y(y)$, we need to integrate the joint density over x variable. However, the boundaries of x variable in the above region is defined differently for different values of y.

- when $y \in [0,1]$, x is bounded between $1-y$ and 1.
- when $y \in (1,2]$, x is bounded between $y-1$ and 1.

Therefore, we will compute $f_Y(y)$ in respective intervals. For $y \in [0,1]$:

$$f_Y(y) = \int_{1-y}^{1} \frac{3x}{2} dx = \left[\frac{3x^2}{4}\right]_{x=1-y}^{x=1} = \frac{6y-3y^2}{4}$$

and for $y \in (1,2]$:

$$f_Y(y) = \int_{y-1}^{1} \frac{3x}{2} dx = \left[\frac{3x^2}{4}\right]_{x=y-1}^{x=1} = \frac{6y-3y^2}{4}$$

Though, identifying $f_Y(y)$ piecewisely is the correct approach, we get the same function in both intervals (because the integral result was taking the square of the values). However for a different joint PDF, this would not be the result.

$$f_Y(y) = \begin{cases} \frac{6y-3y^2}{4} & y \in [0,2] \\ 0 & \text{elsewhere} \end{cases}$$

(c) Let us first calculate the marginal PDF of X:

$$f_X(x) = \int_{1-x}^{1+x} \frac{3x}{2} dy = \left[\frac{3xy}{2}{}_{y=1-x}^{y=1+x}\right] = 3x^2, \quad x \in [0,1]$$

Then:

$$E\left[X^{-1}\right] = \int_0^1 \left(\frac{1}{x}\right) 3x^2 dx = \int_0^1 3x dx = \left[\frac{3x^2}{2}\right]_0^1 = \frac{3}{2}$$

$E[X^{-1}]$.

(d) They are not independent since:

$$f_X(x) f_Y(y) = 3x^2 \frac{6y-3y^2}{4} \neq \frac{3}{2}x = f(x,y)$$

and also, the set of possible values that one random variable can take is totally determined by the realized value of the other random variable.

10.

$$f_X(x) = \int_0^x 2\lambda^2 e^{-\lambda x} e^{-\lambda y} dy = -2\lambda e^{-\lambda x} e^{-\lambda y}\Big|_0^x = 2\lambda e^{-\lambda x}\left(1-e^{-\lambda x}\right), \qquad x \geq 0$$

11. The joint distribution is taking non-negative values in the gray colored domain.

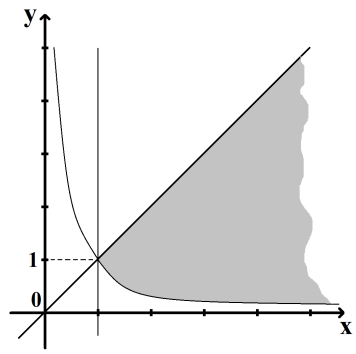

In order to find the marginal distribution of X, we have to fix x variable and calculate the integration of $f_{XY}(x,y)$ over y variable (so we will end up with a function that is dependent on x). But we have to be careful about the boundaries of the integration, since the domain of y is dependent to x ($y \in \left[\frac{1}{x}, x\right]$).

$$f_X(x) = \int_{1/x}^{x} f_{XY}(x,y)\,dy = \int_{1/x}^{x} \frac{1}{2x^2} y^{-1} dy = \frac{\ln y}{2x^2}\bigg|_{x^{-1}}^{x} = \frac{\ln x}{2x^2} - \left(-\frac{\ln x}{2x^2}\right) = \frac{\ln x}{x^2}$$

We have to be more careful about the boundaries of the integral when calculating marginal distribution of Y. Now we will fix y variable and calculate the integration of $f_{XY}(x,y)$ over x variable (so we will end up with a function that is dependent on y). Now the problem arises with the fact that the domain of x being also dependent to y variable since dependency is a symmetric relationship. (But recognize that we are talking about domain dependency, not probabilistic dependency. Yet probabilistic dependency is an expected result of domain dependency. If two random variables are probabilistically dependent, their domain need not be dependent. However if their domains are dependent, then they need to be probabilistically dependent).

If we fix y variable to a value that is greater than or equal to 1, this means that $x \in [y, \infty)$. Then for $y \geq 1$, the marginal distribution of Y, $f_Y(y)$ is:

$$f_Y(y) = \int_{y}^{\infty} f_{XY}(x,y)\,dx = \int_{y}^{\infty} \frac{1}{2y} x^{-2} dx = -\frac{1}{2yx}\bigg|_{y}^{\infty} = 0 - \left(-\frac{1}{2y^2}\right) = \frac{1}{2y^2}$$

If we fix y variable to a value that is less than 1, this means that $x \in [1/y, \infty)$. And we should also realize that y can only take positive values. Then for $y \in (0,1)$, the marginal distribution of Y, $f_Y(y)$ is:

$$f_Y(y) = \int_{1/y}^{\infty} f_{XY}(x,y)\,dx = \int_{1/y}^{\infty} \frac{1}{2y} x^{-2} dx = -\frac{1}{2yx}\bigg|_{1/y}^{\infty} = 0 - \left(-\frac{1}{2}\right) = \frac{1}{2}$$

In the very end you should come up with the following result that if:

$$f_{XY}(x,y) = \begin{cases} \frac{1}{2x^2 y} & 1 \leq x < \infty,\ 1/x \leq y \leq x \\ 0 & \text{elsewhere} \end{cases}$$

then:

$$f_X(x) = \begin{cases} \frac{\ln x}{x^2} & x \geq 1 \\ 0 & \text{elsewhere} \end{cases}, \qquad f_Y(y) = \begin{cases} \frac{1}{2y^2} & y \geq 1 \\ \frac{1}{2} & 0 < y < 1 \\ 0 & \text{elsewhere} \end{cases}$$

12. (a) Since the uniformity property is unaffected under rotation, we can fix first of the points to the top of the circle. Let Θ_1 be the central angle in the opposition of the right arc between the first and the second point. Since the uniformity property is also unaffected under horizontal flip, we can say that the second point is always chosen over the right side of the circle. Truncate the domain to its half on the axis of Θ_1. Let Θ_2 be the central angle in the opposition of the right arc between the first and the third point. Draw the domain of the distribution. Write down the uniform density. Find the region where the desired event occurs.

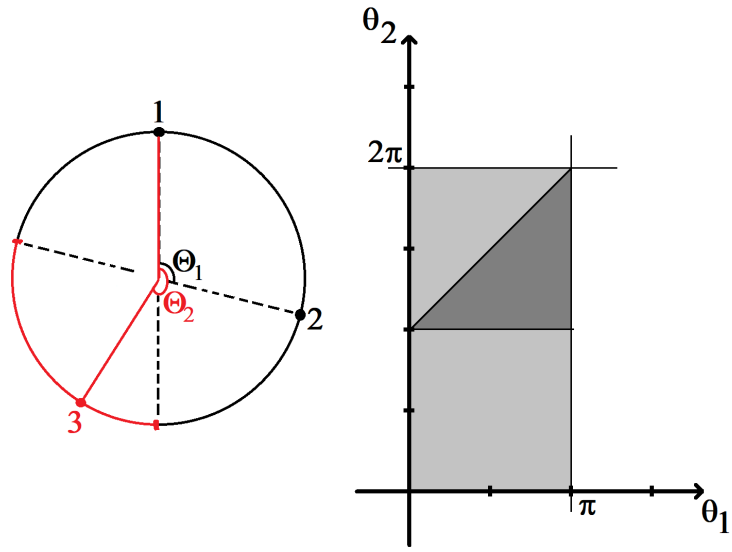

Then;

$$f_{\Theta_1}(\theta_1) = \frac{1}{\pi}; \quad f_{\Theta_2}(\theta_2) = \frac{1}{2\pi}; \quad f_{\Theta_1\Theta_2}(\theta_1, \theta_2) = \frac{1}{2\pi^2};$$

The desired event occurs, if for a fixed value of $\Theta_1 = \theta_1$, Θ_2 remains between π and $\pi + \theta_1$. Then, the desired probability is:

$$\int_0^{\pi} \int_{\pi}^{\pi+\theta_1} f_{\Theta_1\Theta_2}(\theta_1, \theta_2)\, d\theta_2 d\theta_1 = \int_0^{\pi} \int_{\pi}^{\pi+\theta_1} \frac{1}{2\pi^2} d\theta_2 d\theta_1$$
$$= \int_0^{\pi} \left[\frac{\theta_2}{2\pi^2}\right]_{\pi}^{\pi+\theta_1} d\theta_1 = \int_0^{\pi} \frac{\theta_1}{2\pi^2} d\theta_1 = \left[\frac{\theta_1^2}{4\pi^2}\right]_0^{\pi} = \frac{1}{4}$$

In fact, since the joint probability density function is uniformly distributed, we could have ended up with this result just by looking at the proportion of the extra-shaded region in the above figure.

(b) $P(A) = 0.25$, $P(R) = 0$ and $P(O) = 0.75$ followed by part (a). The triangle is an acute triangle if and only if it contains the center of the circle. Probability of a right triangle is zero since the probability selecting two points which are symmetric around the center is assumed to be zero since the related distributions are continuous.

(c) We can form an outer triangle if and only if the inner triangle is acute. So the probability is again 0.25.

13. (a) Shown in the following figure:

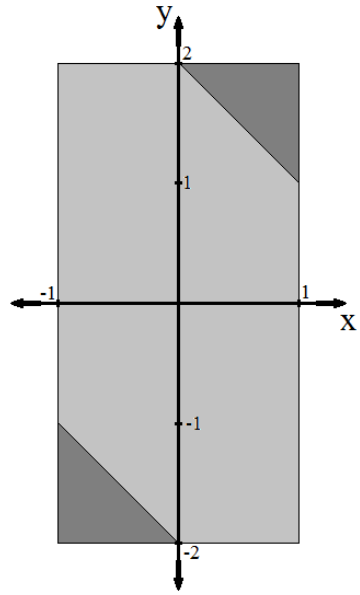

(b)

$$P\{\text{target in the sight}\} = \int_{-1}^{0}\int_{-2}^{-x-2} \frac{-y}{8}dydx + \int_{0}^{1}\int_{2-x}^{2} \frac{y}{8}dydx = 2\int_{0}^{1}\int_{2-x}^{2} \frac{y}{8}dydx$$
$$= \int_{0}^{1}\left[\frac{y^2}{8}\right]_{2-x}^{2} dx = \int_{0}^{1}\frac{4x-x^2}{8}dx = \left[\frac{6x^2-x^3}{24}\right]_{0}^{1} = \frac{5}{24}$$

14. If X and Y are independent, then:

$$0.3 = p_{XY}(0,0) = p_X(0)\,p_Y(0) = 0.6 \times (0.3+a)$$

That makes $a = b = 0.2$. We have $X \sim Bern(p = 0.4)$ and $Y \sim Bern(p = 0.5)$. Hence $Var[X] = 0.24$ and $Var[Y] = 0.25$. The answer is -0.01.

15. The answers are as follows:

(a)

$$f_Y(y) = \int_0^1 1 - x + y dx = y + 0.5, \quad 0 \le y \le 1$$

$$E[Y] = \int_0^1 y f_Y(y)\,dy = \int_0^1 y^2 + 0.5y dy = \frac{7}{12} \approx 0.5833$$

(b)

$$\begin{aligned}
P\{X > 0.5 \cup Y > 0.5\} &= P\{(X \le 0.5 \cap Y \le 0.5)^c\} \\
&= 1 - P\{X \le 0.5 \cap Y \le 0.5\} \\
&= 1 - \int_0^{0.5}\int_0^{0.5} 1 - x + y dxdy \\
&= 1 - \int_0^{0.5}\left[x - \frac{x^2}{2} + yx\right]_{x=0}^{x=0.5} dy \\
&= 1 - \int_0^{0.5}\frac{3+4y}{8}dy \\
&= 1 - \left[\frac{3y+2y^2}{8}\right]_{y=0}^{y=0.5} = 0.75
\end{aligned}$$

16. The answer is $\int_{0.8}^{1}\int_{0.8y}^{1} f_{XY}(x,y)\,dxdy$, according to following figure.

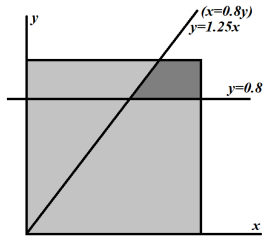

$$\begin{aligned}\int_{0.8}^{1}\int_{0.8y}^{1} f_{XY}(x,y)\,dxdy &= \int_{0.8}^{1}\int_{0.8y}^{1} 1dxdy\\ &= \int_{0.8}^{1} 1-0.8ydy\\ &= \left[y-0.4y^2\right]_{0.8}^{1}\\ &= (1-0.4)-(0.8-0.256)\\ &= 0.056\end{aligned}$$

Again, since the joint PDF is uniform over the unit square, the above probability is simply equal to the area of the extra-shaded region.

17. (a)

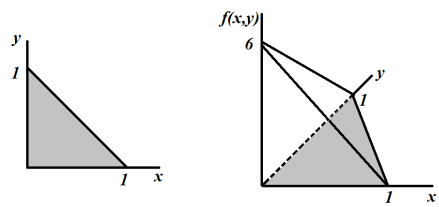

(b) Note that, in order to satisfy $X \le 3Y$, X can at most be 0.75 since $X+Y \le 1$.

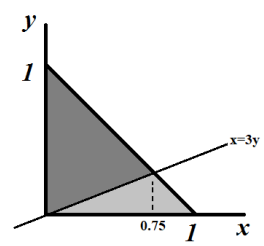

We need to calculate the volume under the joint PDF in the extra-shaded domain.

$$P(X \le 3Y) = \int_0^{0.75}\int_{\frac{x}{3}}^{1-x} 6-6x-6ydydx = \int_0^{0.75}\left[6y-6xy-3y^2\right]_{\frac{x}{3}}^{1-x} dx$$

$$= \int_0^{0.75}\left[3-6x+3x^2\right]-\left[2x-\frac{7x^2}{3}\right]dx = \int_0^{0.75}\frac{16x^2}{3}-8x+3dx$$

$$= \left[\frac{16x^3}{9}-4x^2+3x\right]_0^{0.75} = 0.75$$

Or simply, because we have a pyramid shape and $X \le 3Y$ spans 75% of the base, the probability should also be 0.75.

18.

$$E\left[\frac{X}{Y}\right] = \frac{1}{1}\times\frac{2}{9}+\frac{1}{2}\times\frac{1}{9}+\frac{2}{1}\times\frac{4}{9}+\frac{2}{2}\times\frac{2}{9} \approx 1.3889$$